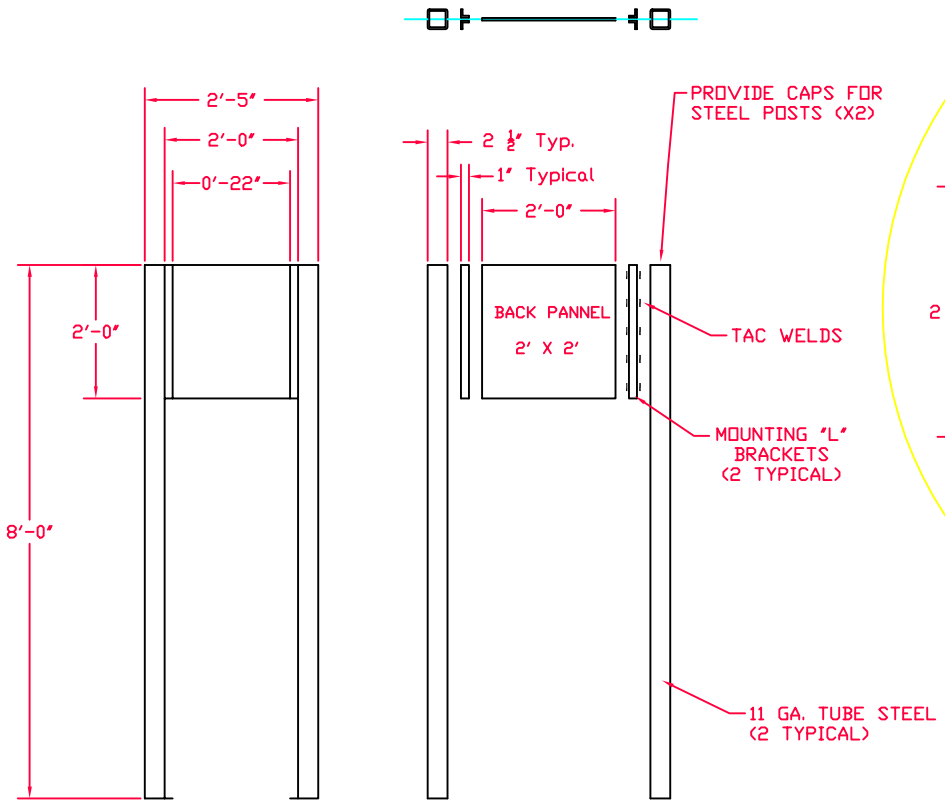

TYPICAL TRAIL SIGN ELEVATION

ALL 11 GUAGE MATERIALS

ALL SIGNAGE IS 22" X 22"

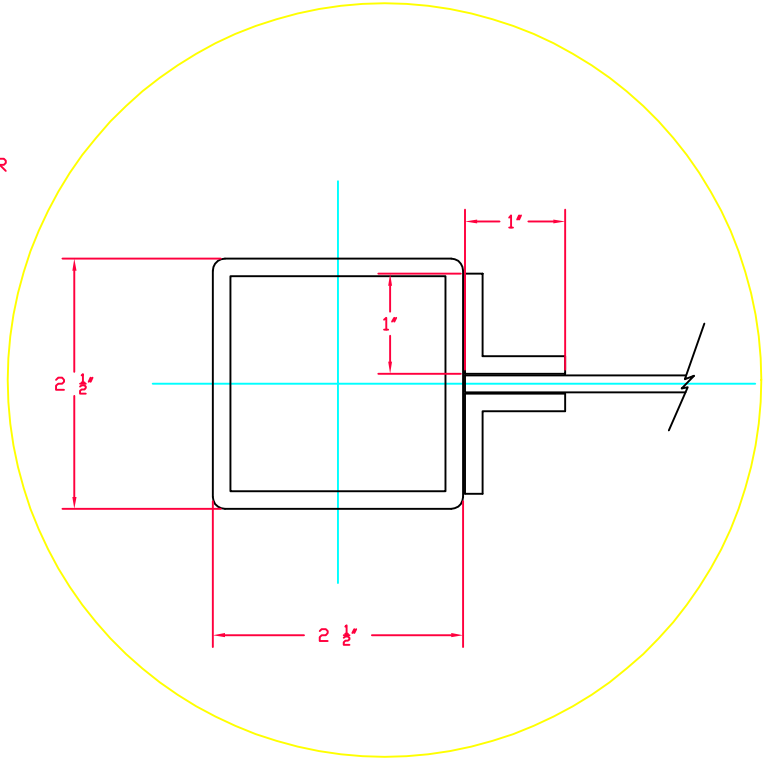

POST DETAIL

TAC WELD "L" BRACKETS TO POSTS
AND "L" BRACKETS TO BACK PANNELS
(1" long beads no more than 4" apart)
AS SHOWN ON ELEVATION (TYPICAL)

Not to Scale

City of Plano, Texas
Parks & Recreation Department
Park Planning Division

No.	Revision/Issue	Date

Standard Details

Single Pannel Trail Sign

Drawn by: T.L.B.	Sheet 1 of 1
Date: 4-8-02	
Scale: 1" = 1'	