City of Plano
Geodetic Control Station

City of Plano Project No.:	**5843**		**Station Name:**	**844**
Gorrondona & Associates Project No.:	0901-3510		**GPS Point No.:**	**844**
County: Collin **State:**	Texas		**Established By:**	**G&AI**
Unit of Measure:	US Survey Foot		**Date Established:**	**2009**
2009 H&V Survey Method:	GPS Observations		**ReSurvey By:**	G&AI
Horizontal Survey Quality:	Second Order, Class 1		**ReSurvey Date:**	2009
Vertical Survey Quality:	See Notes 1 and 2 below			
Mark Logo:	3 1/4" Domed Alum. Disk		**Condition:**	Good
Stamping:	City of Plano Survey Marker,	844 2009 BY G&AI		

NAD83 NSRS 2007	**Latitude:**	**33°05'10.18626"N**	**Longitude:**	**96°43'04.98959"W**
NAD83 NSRS 2007	**Ellipsoid Height:**	**594.03**	**Epoch Date:**	2002
	Geoid Height:	**-85.22**	**Geoid Model:**	GEOID03

City Wide Surface Adjustment Factor	**1.00015421**

Texas North Central Zone (4202) State Plane Coordinate Listing

Horizontal Datum	Horizontal Adjustment	Coordinate Type	Northing	Easting
NAD83	**NSRS 2007**	**Surface**	**7,083,815.45**	**2,514,613.39**
NAD83	NSRS 2007	Grid	7,082,723.22	2,514,225.67
NAD83	HARN 1993	Grid	7,082,723.24	2,514,225.69
NAD27	1986	Grid	517,260.75	2,239,573.46
Elevation	**NAVD 1988**	**679.25**	NGVD 1929	679.28

To Reach Description:

Located along the North side of Hedgcoxe Rd. in a curb inlet, and 278.5' East of the centerline of Freeland Dr.

Aerial Photo

Area Sketch

CITY OF PLANO MON. #844
3 1/4" ALUMINUM DISK
SET IN CONCRETE
MARKED "2009 BY G&AI"
STAMPED "844"

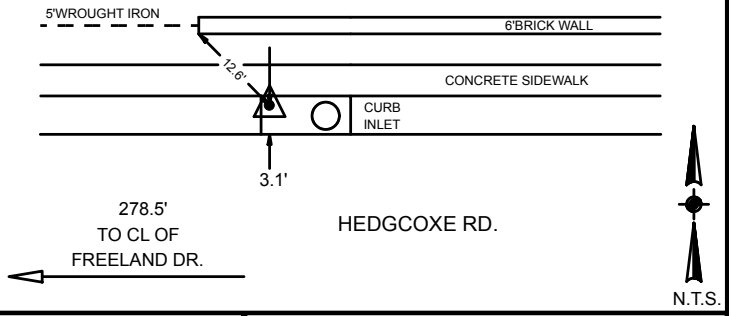

Station Ties:

Object	Distance (Feet)	Direction
Back of Curb	3.1'	North
End of 5' Wrought Iron Fence	12.6'	Southeast
Centerline of Freeland Dr.	278.5'	East

Prepared By:

Gorrondona & Associates, Inc.
6707 Brentwood Stair Road, Suite 50
Fort Worth, Texas 76112
By: Michael D. McGuinness, RPLS, CHS
Texas Registration Number 1965

Notes:
1. **This survey was constrained in the horizontal and vertical component to the published NAD83 HARN positions and NAVD88 Elevations for 19 City of Plano monuments,four NGS stations (horizontally and/or vertically) and four CORS stations.**
2. **Elevations of City of Plano control stations are based solely on GPS Observations. Vertical Accuracy will be based on the quality of the GEOID03 Model and the vertical stability of the monuments constrained in the vertical component.**
3. **The NAD83 NSRS2007 Surface Northing and Easting is based on multiplying the Grid Coordinate Values by the City Wide Surface Adjustment Factor of 1.00015421.**

Disclaimer: This data has been supplied by the City of Plano. No expressed or implied warranties are made by the City of Plano for the accuracy, completeness, reliability, usability, or suitability of the point data. The City of Plano assumes no responsibility for incorrect results or damages resulting from the use of data.