ORDINANCE NO. 2011-1-13

An Ordinance of the City of Plano, Texas partially repealing City of Plano Ordinance 2008-4-39 as further amended by Ordinance No. 2008-6-16 and Ordinance No. 2009-4-17 and codified as Article XX, Residential Code, of Chapter 6 of the Code of Ordinances; and adopting the 2009 Edition of the International Residential Code with certain additions, deletions, and amendments, as the Residential Code of the City of Plano; and providing a repealer clause, a severability clause, a savings clause, a penalty clause, a publication clause and an effective date.

WHEREAS, on April 28, 2008, by Ordinance No. 2008-4-39 the City Council of the City of Plano established a Residential Code and provided regulations thereunder, and such Ordinances were codified as Article XX, Residential Code, of Chapter 6 of the Code or Ordinances of the City of Plano ("City") as further amended by Ordinance No. 2008-6-16 and Ordinance No. 2009-4-17; and

WHEREAS, on October 19, 2010, the Building Standards Commission held a public hearing to discuss the adoption of the 2009 Edition of the International Residential Code, a publication of the International Code Council (I.C.C.), along with the Appendices of such Code, and to receive input from the general public and all persons who may be affected by the proposed adoption; and

WHEREAS, for regulatory purposes due to changes in state law, the City Council is of the opinion that Section 6-710, Chapter 3, Section R325 of Article XX of Chapter 6 of the City Code of Ordinances established by Ordinance No. 2008-4-39 regarding Automatic Sprinkler Systems should be retained as codified in the City Code of Ordinances and that all remaining provisions of Ordinance No. 2008-4-39 as further amended by Ordinance No. 2008-6-16 and Ordinance No. 2009-4-17 should be repealed; and

WHEREAS, Upon recommendation of the Building Standards Commission and upon full review and consideration of all matters attendant and related thereto, the City Council is of the opinion that the 2009 Edition of the International Residential Code, along with the Appendices of such Code and the local amendments thereto, should be approved and adopted as the Residential Code of the City.

NOW, THEREFORE, BE IT ORDAINED BY THE CITY COUNCIL OF THE CITY OF PLANO, TEXAS, THAT:

Section I. All provisions of Ordinance No. 2008-4-39, duly passed and approved by the City Council of the City of Plano on April 28, 2008 and as further amended by Ordinance No. 2008-6-16 and Ordinance No. 2009-4-17, codified as Chapter 6, Article XX of the City of Plano Code of Ordinances are repealed with the exception of the below referenced section which is hereby explicitly retained and shall remain codified in its entirety:

Section 6-710, Chapter 3, Section R325 of Article XX of Chapter 6 of the City of Plano Code of Ordinances established by Ordinance No. 2008-4-39 regarding Automatic Sprinkler Systems as follows:

"**Section R325, Automatic Sprinkler Systems.** An automatic sprinkler system shall be installed in all new buildings 6,000 square feet and greater, and in all existing buildings that are enlarged to be 6,000 square feet or greater, and in building greater than 6,000 square feet which are enlarged. Only gross floor area within the exterior walls shall be used to calculate the building area.

Exception:

a. The floor areas of covered patios and porches open entirely on at least one side, except for guardrails, need not be included in the calculation of the area of the building. "

Section II.

A new Article XX, Residential Code, of Chapter 6 of the Code of Ordinances is hereby adopted and shall read in its entirety as follows:

ARTICLE XX. RESIDENTIAL CODE

DIVISION 1. GENERALLY

Sec. 6-708. Penalty.

Any person, firm or corporation found to be violating any term or provision of this Ordinance, shall be subject to a fine in accordance with Section 1-4(a) of the City Code of Ordinances for each offense. Every day a violation continues shall constitute a separate offense.

Sec. 6-709. Adopted.

The 2009 Edition of the International Residential Code, a publication of the International Code Council (ICC), along with the Appendices of such Code, is hereby adopted and designated as the Residential Code of the City of Plano to the same extent as if such Code were copied verbatim in this Article, subject to deletions, additions, and amendments prescribed in this Article. A copy of the 2009 Edition of the International Residential Code is on file in the office of the City Secretary.

DIVISION 2. AMENDMENTS

Sec. 6-710. Deletions, Additions, Amendments.

The following deletions, additions, and amendments to the International Residential Code adopted herein are hereby approved and adopted:

Chapter 1, Administration

Section R101.1; Insert jurisdiction name as follows:

R101.1 Title. These regulations shall be known as the *Residential Code for One- and Two-family Dwellings* of City of Plano, Texas hereinafter referred to as "this *code*."

Section R102.4; change to read as follows:

R102.4 Referenced codes and standards. The *codes*, when specifically adopted, and standards referenced in this *code* shall be considered part of the requirements of this *code* to the prescribed extent of each such reference. Whenever amendments have been adopted to the referenced *codes* and standards, each reference to said *code* and standard shall be considered to reference the amendments as well. Any reference made to NFPA 70 or the *Electrical Code* shall mean the *Electrical Code* as adopted.

Where differences occur between provisions of this *code* and referenced *codes* and standards, the provisions of this *code* shall apply.

Exception: Where enforcement . . .*{remainder of language unchanged}*. . . .

Subsection R104.2, Applications and permits; is amended by the addition of *Subsection R104.2.1.*

Subsection R104.2.1, Adequate toilet facilities.

Every construction project requiring a building permit within the City limits of the City of Plano shall have adequate toilet facilities for workers associated with the project.

In partially completed phased subdivisions or projects, more than one permanent or temporary toilet may be required, but not less than one shall be provided and at least one permanent or temporary toilet facility shall be maintained in each subdivision or project for the employees or subcontractors of each builder holding a permit for a building in that subdivision or project. A toilet facility must be provided by each builder as long as the builder holds an active building permit in the subdivision or project.

Permanent toilet facility is defined as a room in an existing building or in the building being constructed with a water closet installed in such a room, which conforms to the *Plumbing Code* and is continuously available to all workers involved in a construction project.

Temporary toilet facility is defined as a portable, fully enclosed, chemically sanitized toilet, which is serviced and cleaned at least once each week.

In addition to the justifications in the *Building Code* and in addition to other remedies, the building official may issue a Stop Work Order as described in the *Building Code* for any work done on a project not in compliance with this section.

Subsection R105.2, Work exempt from permit.
Building:

1. One-story… {item unchanged} does not exceed 120 square feet. items number
2. Item Deleted
5. Item Deleted

Subsection R105.3, Application for permit; is amended by the addition of the following paragraphs:

Registration:

To obtain a permit the applicant shall be registered as a contractor.

Exception: Homeowners may obtain permits to do work at their residence without being registered.

a. Registration Requirements: Contractor may register by making application on forms provided by the Building Official. Electrical, irrigation, mechanical, and plumbing contractors shall provide proof of required licenses.

Licensing:

1. Electrical license is a license issued by the State of Texas under provisions of title 8, Occupations Code, Chapter 1305, Administered by the Texas Department of Licensing and Regulation,

2. Mechanical license is authorization issued by the State of Texas allowing an individual to install air conditioning, heating and ventilating systems or their components.

3. Plumbing license is a license issued by the State of Texas under the provisions of Article 6243.101, Vernon's Texas Civil Statutes, as amended, (known as "The Plumbing License Law of 1974").

b. Revocation/Suspension: A contractor's registration may be suspended for the following causes:

1. The contractor fails to finalize permits by obtaining the required, approved inspections.

2. The contractor allows use or occupancy of a structure for which a permit was obtained without first obtaining the required authorization.

3. The contractor has been found by the Building Standards Commission to have been grossly negligent in the performance of his/her work. For purposes of this Section, a contractor may be found to have acted in a grossly negligent manner if such contractor has received six (6) municipal court convictions for city code violations and if such violations occurred in the twelve (12) month period preceding the revocation/suspension action before the Commission.

4. Expiration, suspension or revocation of required license, bond or insurance.

Subsection R105.3.1, Action on application; is amended by the addition of the following paragraph:

A demolition permit may be withheld for any building or structure within the Plano Historic Building and Site Survey as designated in the Preservation Plan for a period not exceeding thirty (30) days pending review by the Heritage Commission.

***Section R105,* is amended by the addition of *Subsection R105.9* to read as follows:**

Subsection R105.9, Withdrawn Permits. Permits may be withdrawn by the applicant if no work has commenced on the project. Permit fees exceeding $50.00 may be partially refunded. Where applicable, fees will be refunded at 80 percent of their original value, excluding the plan review and fire protection plan review deposits.

Permits for which work has commenced may not be withdrawn unless a subsequent permittee has obtained a permit to complete the work, or when work has started unless an inspection has been made and the Building Official has determined that the existing work has created no violation of any code or ordinance.

Expired permits may be withdrawn if determined by the Building Official that no work has commenced.

Withdrawn permits with fees of less than fifty ($50) dollars are nonrefundable.

Subsection R106.1, Submittal documents; is amended by the addition of the following paragraph:

Foundation plans shall be submitted with each application. These plans shall be designed by an engineer licensed by the State of Texas and shall bear that engineer's seal, signature, and date.

Exception: These plans shall not be required for Group U Occupancies when not attached to another occupancy, other than those which are required by separate ordinance.

All structural plans, include framing and foundation, for residential buildings in excess of 6,000 square feet in area (under roof) shall be designed by an engineer licensed by the State of Texas and shall bear that engineer's seal, signature, and date.

Subsection R106.3.1, Approval of construction documents; is changed to read as follows:

When the building official issues a permit, the construction documents shall be approved, in writing, or by a stamp which states "APPROVED and APPROVED AS NOTED BY THE BUILDING OFFICIAL" {the remainder of the section is unchanged}

Section 108.7; add Section 108.7 to read as follows:

108.7 Re-inspection Fee. A reinspection fee may be charged but not be limited to the following:

1. The inspection called for is not ready when the inspector arrives;
2. No building address or permit card is clearly posted;
3. Approved plans are not on the job site available to the inspector;
4. The building is locked or work otherwise not available for inspection when called;
5. The job site is red-tagged twice for the same item;
6. The original red tag has been removed from the job site and/or,
7. Violations exist on the property including failure to maintain erosion control, trash control or tree protection.

Subsection R109.1.3, Floodplain inspections; is changed to read as follows:

For construction permitted in areas prone to flooding as established by Table R301.2(1), upon placement of the lowest floor, including basement, and prior to further vertical construction, the building official may require submission of documentation, prepared and sealed by a registered design professional of the elevation of the lowest floor, including basement, required in Section R322.

Subsection R110 (R110.1 through R110.5); are deleted in its entirety.

Section R112, Board of Appeals; is changed so that the Section title shall read *"Building Standards Commission."*

Subsection R112.2.1, Determination of substantial improvement in areas prone to flooding; is deleted in its entirety.

Subsection R112.2.2, Criteria for issuance of a variance of areas prone to flooding; is deleted in its entirety.

Subsection R112.3, Qualifications; deleted in its entirety

Subsection R114, Stop Work Order; is amended by the addition of Subsection R114.3, to read as follows:
Subsection R114.3, Construction debris

a. Whenever work is being done that is authorized by a permit, and construction debris from that work is not confined to a container or to a site on the property approved by the Building Official or his designee, and such construction debris poses a threat to public health, safety and comfort so that it constitutes a nuisance, the Building Official or his designee may order the worked stopped and the Contractor shall clean up the construction debris within thirty-six (36) hours of receiving written notice of the violation. After the expiration of the thirty-six (36) hour period, Contractor shall pay City a reinspection fee to offset costs incurred by City due to the necessary reinspection before the stop work order is lifted.

b. As used herein, the term "Construction Debris" shall include all materials utilized in the construction process, including all litter and debris deposited and left remaining upon the premises of a job site by a Contractor, Subcontractor, and their employees, agents, and assigns.

c. As used herein "Costs" shall mean all expense incurred by City for the cleaning of the job site and the amount of any unpaid municipal court fine.

Chapter 2, Definitions

Section R202, definition of "Townhouse"; *is changed to read as follows:*

> A single-family dwelling unit constructed in a group of three or more attached units separated by property lines in which each unit extends from foundation to roof and with open space on at least two sides.

Section R202, add definition of "Floor Area, Gross" *as follows;*

> The floor area within the inside perimeter of the exterior walls of the building under consideration, exclusive of vent shafts and courts, without deduction for corridors, stairways, closets, the thickness of interior walls, columns, or other features. The floor area of a building, or portion thereof, not provided with surrounding exterior walls shall be usable area under the horizontal projection of the roof or floor above. The gross floor area shall not include shafts with no openings or interior courts

Section R202; add definition of "Recreation Room" as follows;

A room in a dwelling unit, which is intended for such uses as viewing television or films, listening to recordings, or participating in video or similar games. The area of this room is not to exceed one-tenth of the floor area of the habitable space of the dwelling unit.

Chapter 3, Building Planning

Table R301.2(1); fill in as follows:

GROUND SNOW LOAD	WIND DESIGN		SEISMIC DESIGN CATEGORY[f]
	SPEED[d] (mph)	Topographic Effects[k]	
5 lb/ft^2	90 (3-sec-gust)/76 fastest mile	No	A

SUBJECT TO DAMAGE FROM		
Weathering[a]	Frost line depth[b]	Termite[c]
moderate	6"	very heavy

WINTER DESIGN TEMP[e]	ICE BARRIER UNDER-LAYMENT REQUIRED[h]	FLOOD HAZARDS[g]	AIR FREEZING INDEX[i]	MEAN ANNUAL TEMP[j]
22°F	No	01/02/80	69°F	64.9°F

{No change to footnotes}

Section R302.1; add exceptions to read as follows:

Exceptions: *{previous exceptions unchanged}*

6. Open metal carport structures may be constructed when also approved within adopted ordinances.
7. *Encroachments: In town homes and patio homes, roof overhangs not exceeding two feet in width, and brick ledges, which support exterior veneer walls not exceeding six inches in width, may project onto an adjoining property where an easement is provided for this specific purpose.*

Section R302.2, Exception; change to read as follows:

Exception: A common two-hour fire-resistance-rated wall assembly, or one-hour fire-resistance-rated wall assembly when equipped with a sprinkler system… *{remainder unchanged}*

Section R302.2.4, Exception 5; change to read as follows:

Exception:
5. Townhouses separated by a common two-hour fire-resistance-rated wall, or one-hour fire resistant rated wall when equipped with an automatic sprinkler system, *{remainder unchanged}*

Section R302.3; add Exception #3 to read as follows:

Exceptions:
1. *{existing language unchanged}*
2. *{existing language unchanged}*
3. Two-family dwelling units that are also divided by a property line through the structure shall be separated as required for townhouses.

Section R302.7 Stair protection. *Enclosed accessible space under stairs shall have walls, under stair surface and any soffits protected on the enclosed side with 5/8-inch (15.8 mm) fire-rated gypsum board or one-hour fire-resistive construction.*

Subsection R303.3, Bathrooms; exception; is changed to read as follows:

Exception: The glazed areas shall not be required where artificial light and a mechanical ventilation system, complying with one of the following, are provided;

1. The minimum ventilation rates shall be 50 cfm (24 L/s) for intermittent ventilation or 20 cfm (10 L/s) for continuous ventilation. Ventilation air from the space shall be exhausted directly to the outside.

2. Bathrooms that contain only a water closet, lavatory or combination thereof may be ventilated with an approved mechanical recirculating fan or similar device designed to remove odors from the air.

Subsection R311.2 Egress Door; *addition to* read as follows:

All main or front entry doors to dwelling units shall be arranged so that the occupant has a view of the area immediately outside the door without opening the door. Such view may be provided by a door viewer having a field of view of not less than 180 degrees through windows or through view ports.

Security block strike plate in wood frame construction an open space between trimmers and wood door jambs shall be solid shimmed by a single piece extending not less than 12 inches above and below the strike plate. In wood construction, an open space between trimmers and wood doorjambs shall be solid shimmed extending not less than 6 inches above and below the plate.

Section R313 Automatic Fire Sprinkler Systems; is deleted in its entirety.

Subsection R314.3 Location**;** is amended with the addition of the following:

4. Recreation/Media Rooms
5. Top flights of stairs

R314.3.1, Alterations, Repairs and additions, exception amended with the addition of the following;

2. Installation, alteration or repairs of plumbing, mechanical, electrical service changes, and simple alterations/remodels are exempt from the requirements of this section.

Section R314.4 Power Source; *exception* is amended with the addition of the following;

Exceptions:
1. Smoke alarms/carbon monoxide alarms { remainder unchanged}
2. Interconnection and hard-wiring of smoke alarms/carbon monoxide alarms { remainder unchanged}
3. Projects that may require review by the building official.

Section R319.1 Address Numbers; is amended with the addition of the following;

Buildings shall...*{bulk of section unchanged}*...street or road fronting the property and from rear alleyways adjacent to the property. { remainder unchanged}

Section R324 is omitted

{Section R325, initially adopted by Ordinance No. 2008-4-39 prior to January 1, 2009 and retained by the herein Ordinance as follows:}

Section R325, Automatic Sprinkler Systems. An automatic sprinkler system shall be installed in all new buildings 6,000 square feet and greater, and in all existing buildings that are enlarged to be 6,000 square feet or greater, and in building greater than 6,000 square feet which are enlarged. Only gross floor area within the exterior walls shall be used to calculate the building area.

Exception:
a. The floor areas of covered patios and porches open entirely on a at least one side, except for guardrails, need not be included in the calculation of the area of the building.

Chapter 6, Wall Construction

Subsection R602.6, Drilling and notching – studs; is amended by the addition of a sentence to read as follows:
Studs that are drilled or notched for plumbing pipes shall be a minimum of 2x6 studs.

Section 602.6.1; amend the following:

R602.6.1 Drilling and notching of top plate. When piping or ductwork is placed in or partly in an exterior wall or interior load-bearing wall, necessitating cutting, drilling or notching of the top plate by more than 50 percent of its width, a galvanized metal tie not less than 0.054 inch thick (1.37 mm) (16 Ga) and 5 inches (127 mm) wide shall be fastened across and to the plate at each side of the opening with not less than eight 10d (0.148 inch diameter) having a minimum length of 1 ½ inches (38 mm) at each side or equivalent. Fasteners will be offset to prevent splitting of the top plate material. The metal tie must extend a minimum of 6 inches past the opening. See figure R602.6.1.

Figure R602.6.1; delete the figure and insert the following figure:

WALL CONSTRUCTION

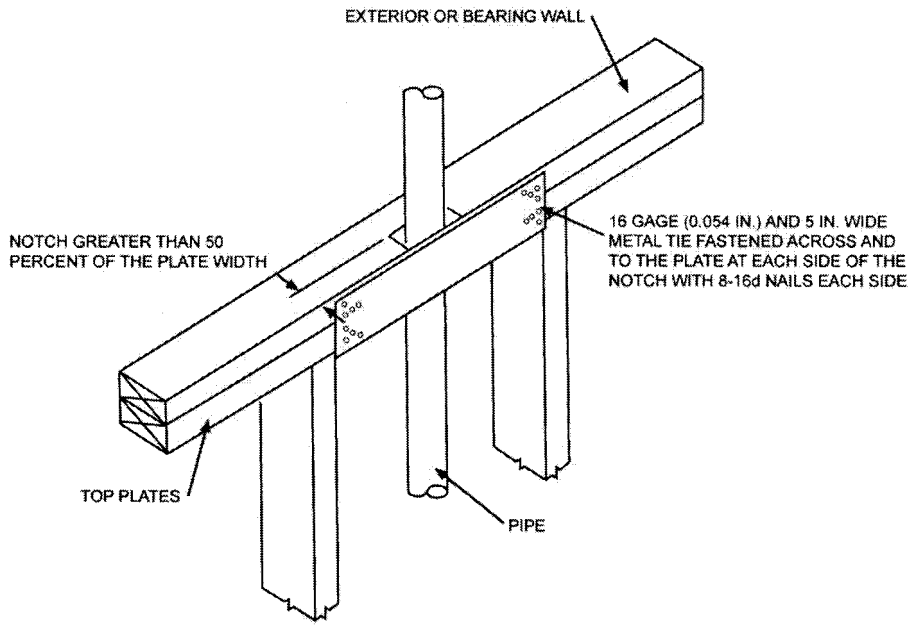

For SI: 1 inch = 25.4 mm

FIGURE R602.6.1
TOP PLATE FRAMING TO ACCOMMODATE PIPING

Chapter 7, Wall Covering

Section R703.7.4.1; add a second paragraph to read as follows:

In stud framed exterior walls, all ties shall be anchored to studs as follows:

1. When studs are 16 in (407 mm) o.c. stud ties shall be spaced no further apart than 24 in (737 mm) vertically starting approximately 12 in (381 mm) from the foundation; or
2. When studs are 24 in (610 mm) o.c. stud ties shall be spaced no further apart than 16 in (483 mm) vertically starting approximately 8 in (254 mm) from the foundation.

Section R703.13; **Metal Exterior Walls.** is an added section to read as follows:

Metal exterior walls are prohibited on residential buildings.

> Exception: Accessory Buildings that do not exceed 120 square feet in floor area in SF, PH, and 2F residential zoning districts.

Chapter 9, Roof Assemblies

Section R902.1; Amend and add exception #3 to read as follows:

R902.1 Roofing covering materials. Roofs shall be covered with materials as set forth in Sections R904 and R905. Class A, B, or C roofing shall be installed *{remainder unchanged}*

Exceptions:
1. {unchanged}
2. {unchanged}
3. Non-classified roof coverings shall be permitted on one-story detached *accessory structures* used as tool and storage sheds, playhouses and similar uses, provided the floor area does not exceed 120 square feet.

Subsection R905.1, Roof covering applications; is amended by the addition of the following paragraphs:

Roof systems in place prior to January 18, 1988, may be repaired with roof coverings of the same type as the original roof when all the following conditions are met:

1. The repair does not exceed twenty-five (25) percent of the roof.

2. The repair does not result in an increase in the total surface area of the roof.

3. Repairs shall not exceed (twenty-five) (25) percent of the roof surface area within any twelve month period unless Class C or better roof covering is provided.

Shingles and shakes shall be applied to roofs with solid sheathing. Existing roofs may be replaced over spaced sheathing. When spaced sheathing is used, sheathing boards shall not be less than 1-inch by 4-inches (25 mm by 102 mm) nominal dimensions and shall be spaced on centers equal to the weather exposure to coincide with the placement of fasteners. When 1-inch by 4-inch (25 mm by 102 mm) spaced sheathing is installed at 10 inches (254 mm) on center, additional 1-inch by 4-inch (25 mm by 102 mm) boards must be installed between the sheathing boards.

Subsection R905.7.1 Deck Requirements; paragraph deleted and amended to read as follows:

Wood shingles shall only be installed on solid sheathing except as allowed for existing roofs in subsection R905.1.

Subsection R905.8.1 Deck Requirements; paragraph deleted and amended to read as follows:

Wood shakes shall only be installed on solid sheathing except as allowed for existing roofs in subsection R905.1.

Subsection R907.1, General; is amended by the addition of a second paragraph to read as follows:

All individual replacement shingles or shakes shall comply with Section R902.1. Repairs exceeding twenty-five (25) percent of the roof surface area within any twelve month period require a building permit.

Chapter *11, Energy Efficiency*

N1101.1 Scope. This chapter and Appendix R, The Residential Green Building Standard, regulates the energy efficiency for the design and construction of buildings regulated by this code.

Section N1101.2; add Section N1101.2.2 to read as follows:

N1101.2.2 Compliance software tools. Software tools used to demonstrate energy code compliance utilizing the UA alternative approach shall be approved by the building official. The PNL program **RES*check*™** is not acceptable for residential compliance.

Exception: When **RES*check*™** "UA Trade-off" compliance approach or the UA Alternate compliance approach method is used, the compliance certificate must demonstrate that the maximum glazed area does not exceed 15% of the conditioned floor area.

Section N1102.1; change to read as follows:

N1102.1 Insulation and fenestration criteria. The building thermal envelope shall meet the requirements of Table N1102.1 based on the climate zone specified in Table N1101.2. The use of Tables N1102.1 and N1102.1.2 are limited to a maximum glazing area of 15% window area to floor area ratio.

Section N1102.2.12; add Section N1102.2.12 to read as follows:

N1102.2.12. Insulation installed in walls. Insulation batts installed in walls shall be totally surrounded by an enclosure on all sides consisting of framing lumber, gypsum, sheathing, wood structural panel sheathing or other equivalent material approved by the *building official*.

Chapter 13, General Mechanical System Requirements

Section M1305.1.3; change to read as follows:

M1305.1.3 Appliances in attics. *Attics* containing *appliances* requiring access shall be provided . . . *{bulk of paragraph unchanged}* . . . sides of the *appliance* where access is required. The clear access opening dimensions shall be a minimum of 20 inches by 30 inches (508 mm by 762 mm), or larger and large enough to allow removal of the largest *appliance*. As a minimum, access to the *attic* space, provide one of the following:

1. A permanent stair.
2. A pull down stair with a minimum 300 lb (136 kg) capacity.
3. An access door from an upper floor level.
4. Access Panel may be used in lieu items 1, 2, and 3 with prior approval of the *building official* due to building conditions.

Exceptions:

1. The passageway and level service space are not required where the *appliance* can be serviced and removed through the required opening.
2. Where the passageway is unobstructed... *{remainder unchanged}*

Section M1305.1.3.1; add text to read as follows:

M1305.1.3.1 Electrical requirements. A luminaire controlled by a switch located at the required passage-way opening and a receptacle outlet shall be installed at or near the *appliance* location in accordance with Chapter 39. Low voltage wiring of 50 Volts or less shall be installed in a manner to prevent physical damage.

Subsection M1307.3.1, Protection from impact; is deleted in its entirety.

Chapter 14, Heating and Cooling Equipment

Section M1411.3; change to read as follows:

M1411.3 Condensate disposal. Condensate from all cooling coils or evaporators shall be conveyed from the drain pan outlet to an approved place of disposal a sanitary sewer through a trap, by means of a direct or indirect drain. {remainder unchanged}

Section M1411.3.1, Items 3 and 4; add text to read as follows:

M1411.3.1 Auxiliary and secondary drain systems. *{bulk of paragraph unchanged}*

1. *{text unchanged}*

2. *{text unchanged}*

3. An auxiliary drain pan… *{bulk of text unchanged}*... with Item 1 of this section. A water level detection device may be installed only with prior approval of the *building official.*

4. A water level detection device… *{bulk of text unchanged}*... overflow rim of such pan. A water level detection device may be installed only with prior approval of the *building official.*

Chapter 15, Exhaust Systems

Section M1501; add new Section M1501.2 to read as follows:

M1501.2 Material and size. Exhaust ducts shall have a smooth interior finish and shall be constructed of metal a minimum 0.016-inch (0.4mm) thick. The exhaust duct size shall be 4 inches (102 mm) nominal in diameter. Duct size shall not be reduced along its developed length or at termination.

Section M1501; add new Section M1501.3 to read as follows:

M1501.3 Specified length. The maximum length of the **exhaust duct shall be 35 feet** (10668 mm) from the connection to the transition duct from the *appliance* to the outlet terminal. Where fittings are used, the maximum length of the exhaust duct shall be reduced in accordance with Table M1502.4.4.1.

Chapter 20, Boilers/Water Heaters

Subsection M2005.2, *Prohibited locations;* is changed to read as follows:

Fuel-fired water heaters shall not be installed in a room used as a storage closet. Water heaters located in a bedroom or bathroom shall be installed in a sealed enclosure so that combustion air will not be taken from the living space. Access to such enclosure may be from the bedroom or bathroom when through a solid door, weather-stripped in accordance with the exterior door air leakage requirements of the *International Energy Conservation Code* and equipped with an approved self-closing device. Direct-vent water heaters are not required to be installed within an enclosure.

Subsection G2408.3, *Private garages;* is deleted in its entirety.

Subsection G2412.5, *Identification; is amended by the addition of a second paragraph to read as follows:*

> Both ends of each section of medium pressure gas piping shall identify its operating gas pressure with an approved tag. The tags are to be composed of aluminum or stainless steel and the following wording shall be stamped into the tag:
> "WARNING 1/2 to 5 psi gas pressure Do Not Remove"

Subsection G2413.3, *Sizing;* is amended by the addition of an exception to read as follows:

> *Exception:* Corrugated stainless steel tubing (CSST) shall be a minimum of 1/2".

Subsection G2415.10, Minimum burial depth; is changed to read as follows:

> Underground piping systems shall be installed a minimum depth of 18 inches (458 mm) below grade.

Subsection G2417.1, *General; is* changed to read as follows:

> Prior to acceptance and initial operation, all piping installations shall be inspected and pressure tested to determine that the materials, design, fabrication, and installation practices comply with the requirements of this code. The permit holder shall make the applicable tests prescribed in Sections 2417.1.1 through 2417.1.5 to determine compliance with the provisions of this code. The permit holder shall give reasonable advance notice to the code official when the piping system is ready for testing. The equipment, material, power and labor necessary for the inspections and test shall be furnished by the permit holder and the permit holder shall be responsible for determining that the work will withstand the test pressure prescribed in the following tests.

Subsection G2417.4, *Test pressure measurement;* is changed to read as follows:

> Test pressure shall be measured with a monometer or with a pressure-measuring device designed and calibrated to read, record, or indicate a pressure loss caused by leakage during the pressure test period. The source of pressure shall be isolated before the pressure tests are made.

Subsection G2417.4.1, *Test pressure;* is changed to read as follows:

The test pressure to be used shall be not less than 3 psig (20 kPa gauge), or at the discretion of the Code Official, the piping and valves may be tested at a pressure of at least six (6) inches (152 mm) of mercury, measured with a manometer or slope gauge. For tests requiring a pressure of 3 psig, gauges shall utilize a dial with a minimum diameter of three and one half inches (3 ½"), a set hand, 1/10 pound incrementation and pressure range not to exceed 6 psi for tests requiring a pressure of 3 psig. For tests requiring a pressure of 10 psig, diaphragm gauges shall utilize a dial with a minimum diameter of three and one-half inches (3 ½"), a set hand, a minimum of 2/10 pound incrementation and a pressure range not to exceed 20 psi. For welded piping, and for piping carrying gas at pressures in excess of fourteen (14) inches water column pressure (3.48 kPa) (1/2 psi) and less than 200 inches of water column pressure (52.2 kPa) (7.5 psi), the test pressure shall not be less than ten (10) pounds per square inch (69.6 kPa). For piping carrying gas at a pressure that exceeds 200 inches of water column (52.2 kPa) (7.5 psi), the test pressure shall be not less than one and one-half times the proposed maximum working pressure.

Subsection G2417.4.2, *Test duration;* is changed to read as follows:

Test duration shall be held for a length of time satisfactory to the Code Official, but in no case for less than fifteen (15) minutes. For welded piping, and for piping carrying gas at pressures in excess of fourteen (14) inches water column pressure (3.48 kPa), the test duration shall be held for a length of time satisfactory to the Code Official, but in no case for less than thirty (30) minutes.

Subsection G2420.1, *General;* is amended by the addition of *Subsection G2420.1.4* to read as follows:

Subsection G2420.1.4, Valves in CSST installations. Shutoff valves installed with corrugated stainless steel (CSST) piping systems shall be supported with an approved termination fitting, or equivalent support, suitable for the size of the valves, of adequate strength and quality, and located at intervals so as to prevent or damp out excessive vibration but in no case greater than 12-inches from the center of the valve. Supports shall be installed so as not to interfere with the free expansion and contraction of the system's piping, fittings, and valves between anchors. All valves and supports shall be designed and installed so they will not be disengaged by movement of the supporting piping.

Section G2420.5.1 (409.5.1); add text to read as follows:

G2420.5.1 (409.5.1) Located within the same room. The shutoff valve... *{bulk of paragraph unchanged}*... in accordance with the appliance manufacturer's instructions. A secondary shutoff valve must be installed within 3 feet (914 mm) of the firebox if appliance shutoff is located in the firebox.

Subsection G2421.1, Pressure regulators; is amended by the addition of a second paragraph and exception to read as follows:

Access to regulators shall comply with the requirements for access to appliances as specified in Section M1305.

Exception: A passageway or level service space is not required when the regulator is capable of being serviced and removed through the required attic opening.

Section G2422.1.2.3; delete Exception 1

Subsection G2439.5, *Clothes dryer ducts;* is amended by the addition of a sentence to read as follows:

The size of duct shall not be reduced along its developed length nor at the point of termination.

Subsection G2445.2, *Prohibited use;* is changed to read as follows:

One or more unvented room heaters shall not be used as the sole source of comfort heating in a dwelling unit.
Exception: Existing approved unvented heaters may continue to be used in dwelling units, in accordance with the code provisions in effect when installed, when approved by the Code Official unless an unsafe condition is determined to exist as described in *International Fuel Gas Code,* Section 108.7.

Subsection G2448.1.1, *Installation requirements;* is changed to read as follows:

The requirements for water heaters relative to access, relief valves, drain pans and scald protection shall be in accordance with this Code.

Chapter 27, Plumbing Fixtures

Section P2709.2; add Exception to read as follows:

Exception: Showers designed to comply with ICC/ANSI A117.1.

Section P2717.2; change text to read as follows:

P2717.2 Sink and dishwasher. A sink and dishwasher are permitted ... *{bulk of text unchanged}* ...wye fitting to the sink tailpiece. The waste line of a domestic dishwashing machine discharging into a kitchen sink tailpiece shall connect to a deck mounted *air break.*

Section P2717.3; change text to read as follows:

P2717.3 Sink, dishwasher and food grinder. The combined discharge ... *{bulk of text unchanged}* ... head of the food grinder. The waste line of a domestic dishwashing machine discharging into a kitchen sink tailpiece or food waste grinder shall connect to a deck mounted *air break.*

Chapter 28, Water Heaters

Subsection P2801.5, *Required Pan;* is amended by the addition of the following;

The pan drain pipe material shall comply with Table 2905.4
Exception: Water heaters in garages or ground floor of dwellings.

Subsection P2801.6, *Water heaters installed in garages;* is amended by the addition of exceptions to read as follows:

Exception:

1. Elevation of the ignition source is not required for water heaters that are listed as flammable vapor resistant and for installation without elevation.

2. Electric Water Heater.

Chapter 29, Water Supply and Distribution

Section P2902.5.3; change to read as follows:

P2902.5.3 Lawn irrigation systems. The potable water supply to lawn irrigation systems shall be protected against backflow by an atmospheric-type vacuum breaker, a pressure-type vacuum breaker, a double-check assembly or a reduced pressure principle backflow preventer. A valve shall not be installed downstream from an atmospheric vacuum breaker. Where chemicals are introduced into the system, the potable water supply shall be protected against backflow by a reduced pressure principle backflow preventer.

Table P2905.4.,Water Service Pipe, and Table P2905.5 Water Distribution Pipe; are amended by the deletion of the following:

Polybutylene (PB) plastic pipe
Polybutylene (PB) plastic tubing
PVC plastic pipe

Subsections P2904.5.1 and 2904.15; is amended by deleting all references to "PB" plastic pipe.

Chapter 30, Sanitary Drainage

Subsection P3005.2.6, Base of Stacks; ***is changed to read as follows:***

Each horizontal drain shall be provided with a cleanout at its upper terminal.

Chapter 31, Vents

Subsection P3111; *is deleted in its entirety*

Subsection P3112.2; delete and replace with the following:

P3112.2 Installation. Traps for island sinks and similar equipment shall be roughed in above the floor and may be vented by extending the vent as high as possible, but not less than the drainboard height and then returning it downward and connecting it to the horizontal sink drain immediately downstream from the vertical fixture drain. The return vent shall be connected to the horizontal drain through a wye-branch fitting and shall, in addition, be provided with a foot vent taken off the vertical fixture vent by

means of a wye-branch immediately below the floor and extending to the nearest partition and then through the roof to the open air or may be connected to other vents at a point not less than six (6) inches (152 mm) above the flood level rim of the fixtures served. Drainage fittings shall be used on all parts of the vent below the floor level and a minimum slope of one-quarter (1/4) inch per foot (20.9 mm/m) back to the drain shall be maintained. The return bend used under the drainboard shall be a one (1) piece fitting or an assembly of a forty-five (45) degree (0.79 radius), a ninety (90) degree (1.6 radius) and a forty-five (45) degree (0.79 radius) elbow in the order named. Pipe sizing shall be as elsewhere required in this Code. The island sink drain, upstream of the return vent, shall serve no other fixtures. An accessible cleanout shall be installed in the vertical portion of the foot vent.

***Chapters 33-42**, Deleted in their entirety. Replace with the 2011 National Electrical Code*

***Appendix G is adopted;** Swimming Pools, Spas and Hot Tubs*

***Appendix M**, "Home Day Care – R3 Occupancy"* is amended to read as follows:

REQUIREMENTS FOR GROUP R; DIVISION 3.1 OCCUPANCIES
"In Home Daycare"

Subsection AM101.1 General, changed in its entirety to read as follow: Building or parts of buildings classified as R3.1 shall comply the provisions noted below along with any non-amended provisions located in Appendix M.

Subsection AM101.2 Special Provisions is added, All rooms or spaces used for the purpose of providing daycare shall be located on the ground floor. All stairways or ramps providing access to areas above or below the ground floor shall be made inaccessible to children by means of an approved permanent barrier located at the ground floor.

Subsection AM101.3. Certificate of Occupancy is added, A Certificate of Occupancy is required for all buildings containing R-3.1 occupancy. Such Certificate of Occupancy must be renewed annually in conjunction with the State mandated inspections conducted by the Fire Department. The Certificate of Occupancy will only be renewed when it is determined by the Fire Marshall that the building complies with all the provisions of this Chapter. Application for the Certificate of Occupancy shall be made in the Office of the Building Official and a fee shall be collected as prescribed in the approved fee schedule.

Section AM102 – Definitions added the following:

> *In home daycare or Day Care Center (in home)* – An operation providing care in the caretaker's residence for less than 24 hours a day for up to 12 children under the age of 14, provided that the total number of children, including the caretaker's own children, is no more than 12 at any time. *(ZC 2008-74; Ordinance No. 2009-6-7). If required by the State of Texas, the daycare must be licensed or registered. Care provided to eight or fewer children is allowed by right. Care provided to nine or more children is allowed with approval of a Specific Use Permit (SUP).*

All group day care homes which were licensed by the State of Texas or had a license application pending on or before October 25, 1993, are considered to be a legal use in residential districts and will not require SUP approval as long as a valid license is maintained for the operation in its original location and it provides care for less than 24 hours a day for no more than 12 children (including the_caretaker's and staff's children) under the age of 14.

Habitable rooms – Rooms use for living, sleeping, eating, and cooking.

Subsection AM103.1.2 Basements is deleted in its entirety.

Subsection AM103.3 – Type of lock and latches for exits, adds the following: An approved emergency plan shall be posted and maintained in the dwelling.

Section AM104 Smoke Detection is changed in its entirety and replacing AM104.1, AM104.2, and AM104.3 with the following subsections:

Subsection AM104.1 General, changed to read as follow: Every habitable room in buildings housing R3.1 Occupancies shall be equipped with an approved smoke detector. All such smoke detectors shall be interconnected in such a manner that if smoke is detected by a detector, all of the detectors will alarm.

Exceptions: An approved heat detector may be substituted for the required smoke detector located in the kitchen in R3.1 Occupancies. All other requirements for smoke detection equipment for R3.1 Occupancies must be met.

Subsection AM104.2 Kitchens is added, Kitchens in buildings housing R3.1 Occupancies shall be equipped with an approved 2A:10-B:C fire extinguisher. An additional approved 2A:10-B:C fire extinguisher shall be located in the area of the building used for daycare purposes.

Appendix R, Residential Green Building to read as follows:

APPENDIX R; Residential Green Building Standard

GENERAL
Section R101. Purpose. The purpose of this appendix is to regulate the design, construction and selection of effective conservation of energy efficiency, conservation of water, and indoor air quality for new single family residential buildings by establishing a green building standard 15% above energy code requirement.

DEFINITIONS
Section R102. Definitions. For the purposes of this appendix, the terms, phrases and words listed in this section and their derivatives shall have the indicated meanings.

A/C CONDENSER – The outside fan unit of the air conditioning system designed to liquefy refrigerant vapor by removal of heat from freon gas, turning gas back to liquid and pumping the liquid back to the coil in a furnace.

AFUE - Annual Fuel Utilization Efficiency. The AFUE number represents how efficiently a furnace converts fuel to energy. The higher the AFUE, the greater the efficiency. The U.S. government's established minimum AFUE rating for a furnace is 78 percent.

DUCT – A tube or conduit utilized for conveying air. Air passages of self-contained systems are not to be construed as air ducts.

ENERGY SYSTEMS LABORATORY - (ESL) is a division of the Texas Engineering Experiment Station and a member of the Texas A&M University System. Senate Bill 5, in 2001, assigned ESL an important role in the implementation of state energy standards and assistance with calculation of emissions reduction benefits from energy efficiency and renewable energy initiative.

GREEN BUILDING - Structures and their surrounding landscapes designed, constructed and maintained to decrease energy and water usage and costs, to improve the efficiency and longevity of building systems and to decrease the burdens imposed on the environment and public health.

GREEN BUILT NORTH TEXAS - An initiative of the Homebuilders Association of Greater Dallas that provides climate-specific guidelines and verification systems for residential and multifamily green buildings which can be found at www.greenbuiltnorthtexas.com.

GREEN BUILT NORTH TEXAS-CERTIFIABLE - A proposed project that is not required to be registered with the Home Builders Association of Greater Dallas, but is planned, designed and constructed to meet or exceed a certified rating using version 2.0 of the Green Built North Texas rating system.

HERS – Home Energy Rating System. A home energy rating is an analysis of a home's projected energy efficiency in comparison to a 'reference home' based on the 2006 International Energy Conservation Code. A home energy rating involves both an analysis of a home's construction plans, as well as onsite inspections and testing by a certified Home Energy Rater. This analysis yields a projected, pre-construction HERS Index.

HERS® Index – Energy use index. A HERS Index of 100 represents energy use of the "American Standard Building" and an Index of 0 (zero) indicates a building using no net purchased energy (a Zero Energy Building). The lower a home's HERS Index, the more energy efficient.

HOME ENERGY RATER- Contractor who performs a standardized evaluation of the energy efficiency of a home. The rater conducts onsite inspections, including a blower door test (to test the leakiness of the house) and a duct test (to test the leakiness of the ducts). Results of tests with data from the software analysis are used to generate a final HERS Index score for a home.

HEATING SEASONAL PERFORMANCE FACTOR (HSPF) – Measurement used to gauge the efficiency of the heating mode of heat pumps. The higher the number, the greater the efficiency. (i.e. 6.8 HSPF.)

LEED - Leadership in Energy and Environmental Design green building rating systems nationally accepted standards for green building developed by the USGBC.

NFRC LABEL – National Fenestration Rating Council label appears on windows, doors, and skylights. The label gives ratings for the U-Factor, the Solar Heat Gain Coefficient (SHGC), Visible Light Transmittance (VT), Air Leakage (AL), and Condensation Resistance (CR).

RADIANT BARRIERS - Materials that are installed in buildings to reduce summer heat gain and winter heat loss, and hence to reduce building heating and cooling energy usage. A thin sheet or coating of a highly reflective material, usually aluminum, applied to one or both sides of a number of substrate materials.

RESNET - RESIDENTIAL ENERGY SERVICES NETWORK - An industry not-for-profit membership corporation which created the national standards for building.

R VALUE - A measure of a material's resistance to the passage of heat. A higher R value indicates more insulating "power". Inverse of U factor.

SEASONAL ENERGY EFFICIENCY RATIO (SEER) – Measure of efficiency by which the cooling process of air conditioners and heat pumps is rated. The higher the SEER, the greater the efficiency. (i.e. 13 SEER)

SOLAR HEAT GAIN COEFFICIENT (SHGC) - The fraction of solar radiation admitted through a window, patio door or skylight. The lower an SHGC, the less solar heat it transmits.

THERMOSTAT – An automatic control device used to maintain temperature at a fixed or adjustable set point.

U-FACTOR - Measures heat transfer through a material such as a window, door, or skylight. The lower the U-Factor, the greater resistance to heat flow. Inverse of R value.

USGBC - The U.S. Green Building Council, a nonprofit organization comprised of leaders from the building industry formed to encourage sustainability by promoting buildings that are environmentally responsible, profitable and healthy places to live and work.

Section R103. Requirements.
In order to meet 15% above minimum energy Code provisions for energy efficiency, all new single-family residential homes must:

1. Submit an International Code Compliance Calculator (IC3) Energy Certificate to the building official which describes NOx emissions savings.
2. Provide a post construction HERS certificate documenting an 85 HERS Index or less.
3. Provide a landscape (turf and trees) that will survive stage 3 drought restrictions and a 2"deep mulch required in all beds.
4. Provide a water heater within 30 ft. of fixtures or on demand system or recirculating system or parallel piping system from a central manifold
   (PEX)

Section R104. Compliance.
Single family residential homes can demonstrate compliance by:

1. Use of the International Code Compliance Calculator (IC3) software with a 15% above code result
   Or
2. Prescriptive options outlined in City approved Energy Code Review Sheet.
   Or
3. Registration and completion of the Green Built North Texas (GBNT) program
   as it exists or may be amended.

Or

4. Registration and completion of the Environmental Protection Agency's most current edition of the ENERGY STAR® program.

Section R105. Indoor Air Quality.

The minimum standard for indoor air quality of single-family residential structures shall meet the following requirements:

1. The main trunkline HVAC plenum in direct contact with heating and cooling equipment on the supply side and return must be constructed of sheet metal (no duct board), or equivalent material approved by the Building Official.
2. Heating and cooling equipment shall only be used during construction after manufacturer specified filter is installed. Used filters must be replaced with a new manufacturer recommended filter prior to the homeowner occupying the structure.
3. Every home must be tested (no batch testing allowed) by a Residential Energy Services Network (RESNET) HERS inspector/rater who is accredited through a RESNET approved HERS provider. The HERS provider must register with the City on an annual basis.
4. A Minimum of one programmable thermostat is required on every story.
5. A return air path shall be provided for any room that can be closed off by a door (except for baths, kitchens, closets, pantries, mechanical rooms, and laundry rooms).
6. All Joints in the air distribution system including ducts, plenums, and equipment shall be sealed duct mastic.
7. Central vacuums, where provided, shall be vented outdoors.

Section R106. Exterior and Wet Walls.

Vinyl wallpaper is not allowed on the inside of exterior wall or either side of wet walls such as bathrooms, kitchen, or laundry rooms.

Section R107. Roofing.

Provide metal drip edge at all exposed roof decking.

Section R108. Water Conservation.

In addition to the City's Landscape Ordinance and other applicable regulations as they stand or may be amended, the following must be accomplished:

1. Bedding must be mulched to a depth of 2-4 inches using recycled content mulch, which includes wood construction waste.
2. A portable drip irrigation bag or zoned bubbler system must be installed for each installed tree.

Section III. All provisions of the Code of Ordinances of the City of Plano in conflict with the provisions of this Ordinance are hereby repealed, and all other provisions of the Code of Ordinances of the City of Plano, not in conflict with the provisions of this Ordinance, shall remain in full force and effect.

Section IV. It is the intention of the City Council that this Ordinance, and every provision thereof, shall be considered severable, and the invalidity or unconstitutionality of any section, clause, provision or portion of this Ordinance shall not affect the validity or constitutionality of any other portion of this Ordinance.

Section V. The repeal of any Ordinance or part of Ordinances effectuated by the enactment of this Ordinance shall not be construed as abandoning any action now pending under or by virtue of such Ordinance or as discontinuing, abating, modifying or altering any penalty accruing or to accrue, or as affecting any rights of the municipality under any section or provisions of any Ordinances at the time of passage of this Ordinance.

Section VI. Any person, firm or corporation found to be violating any term or provision of this Ordinance, shall be subject to a fine in accordance with Section 1-4(a) of the City Code of Ordinances for each offense. Every day a violation continues shall constitute a separate offense.

Section VII. This Ordinance shall become effective March 1, 2011, and after its passage and publication as required by law.

DULY PASSED AND APPROVED this the 10th day of January, 2011.

Phil Dyer, MAYOR

ATTEST:

Diane Zucco, CITY SECRETARY

APPROVED AS TO FORM:

Diane C. Wetherbee, CITY ATTORNEY